SLAM-Equipped Rescue Robot Chassis development—

(Static Structural Analysis Report)

Basic Multidisciplinary Project
Guide: Mr. Ramesh P. S

G Hariharan
25BME0093
VIT Vellore
Mechanical Engineering

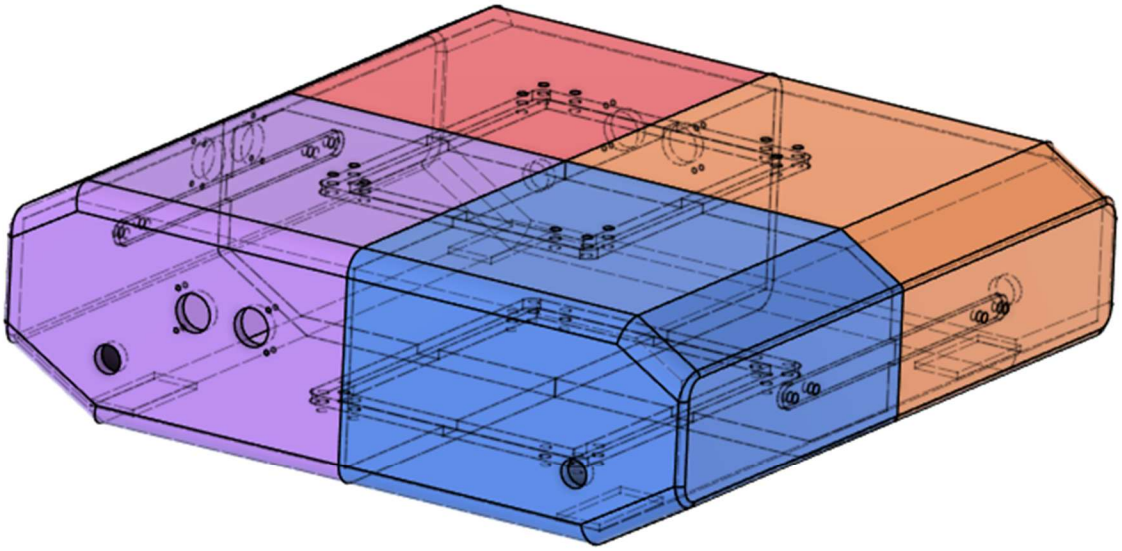

1. Introduction

This report documents the structural analysis of a 4-wheel rescue-robot chassis designed to carry an ESP32-based sensor suite and small payload. The goal is to verify that the 3D-printable chassis geometry can safely withstand representative static loads corresponding to the robot's own mass and moderate obstacle impacts. The analysis focuses purely on the mechanical response of the chassis; electronics and control software are out of scope.

---

2. CAD Model Overview

The chassis is a closed-shell body created in Fusion 360 by modelling one quarter of the geometry and mirroring it to obtain a symmetric 4-wheel layout. The design provides a lower deck for motors, batteries, and power electronics and an upper deck for the ESP32, breadboard, and sensors. Wheel shafts exit through circular cut-outs on the side walls, and three front openings are reserved for ultrasonic distance sensors. Internal bosses and pads are used for mounting electronics, while the outer shell is filleted at stress-critical corners to reduce stress concentrations.

---

3. Material Selection and Properties

For analysis, the chassis material is assumed to be ABS plastic to represent a robust thermoplastic suitable for functional prototypes and small rescue robots. ABS provides higher impact resistance and heat resistance than standard PLA, which is beneficial in harsh environments.

Material properties taken from the Fusion 360 ABS material card used in the simulations are:
- Density: 1.060×10^{-6} kg/mm³
- Young's modulus: 2240 MPa
- Poisson's ratio: 0.38
- Yield strength: 20 MPa
- Ultimate tensile strength: 29.6 MPa

These values are consistent with typical datasheet ranges for amorphous ABS grades used in 3D printing and injection molding.

4. Finite Element Model and Assumptions

All simulations were performed using the Static Stress study type in Autodesk Fusion 360. The key modelling assumptions are:
- Linear elastic, isotropic ABS behavior (no plasticity or creep).
- Static loading only; dynamic impact effects and fatigue are neglected.
- The four motor mount regions are treated as perfectly fixed to represent stiff motor housing and wheel assemblies.
- Loads represent quasi-static equivalents of the robot's self-weight and a moderate localized impact.

4.1 Mesh

The chassis and internal mounting features were meshed with second-order (parabolic) tetrahedral solid elements. The main mesh settings were:
- Average element size: 10% of the model size.
- Minimum element size: 20% of the average size.
- Curved mesh elements enabled.
- Maximum aspect ratio: 10.

For both studies, the resulting mesh contained approximately 46,520 nodes and 23,247 elements, which provides adequate resolution for a first-pass design check.

4.2 Boundary Conditions

The chassis is supported at the four motor mount regions where the wheel-axle holes are located. These small patches were constrained with a fixed support condition (Ux = Uy = Uz = 0), assuming negligible compliance at the motor/chassis interface.

4.3 Load Cases

Two load cases were analysed:

• Load Case 1 – Uniform Top Load (Self-Weight + Payload)
A total downward force of 10 N was applied on the upper deck surfaces that support the electronics and payload. This represents the combined mass of the chassis, batteries, electronics, and a small additional payload under quasi-static conditions. The force was distributed over the deck area in Fusion 360.

• Load Case 2 – Corner Load (Localised Obstacle / Drop)
A concentrated force of 30 N was applied at a front-corner region of the chassis, oriented diagonally downward along the longitudinal and vertical directions. In Fusion 360 this was modelled as a 30 N force with components of approximately -21.2 N in X and -21.2 N in Z. This case approximates the chassis landing on one front corner or striking a rigid obstacle during operation.

5. Results

5.1 Summary Tables

Table 1 summarizes the maximum von Mises stress, maximum total displacement, and minimum safety factor for each load case, as reported in the Fusion 360 result summaries.

Table 1 – Static FEA results for ABS chassis
- Load Case 1 (Uniform 10 N top load)
  - Maximum von Mises stress: 0.121 MPa
  - Maximum total displacement: 0.013 mm
  - Minimum safety factor (based on 20 MPa yield): 165.7

- Load Case 2 (30 N corner load)
  - Maximum von Mises stress: 0.369 MPa
  - Maximum total displacement: 0.009 mm
  - Minimum safety factor (based on 20 MPa yield): 54.2

5.2 Stress Distribution

For the uniform top load, stresses are low and broadly distributed, with peak von Mises stress of only 0.121 MPa occurring near geometric discontinuities close to the motor mount regions. This is more than two orders of magnitude below the ABS yield strength, giving a safety factor above 165 even under the assumed combined payload.

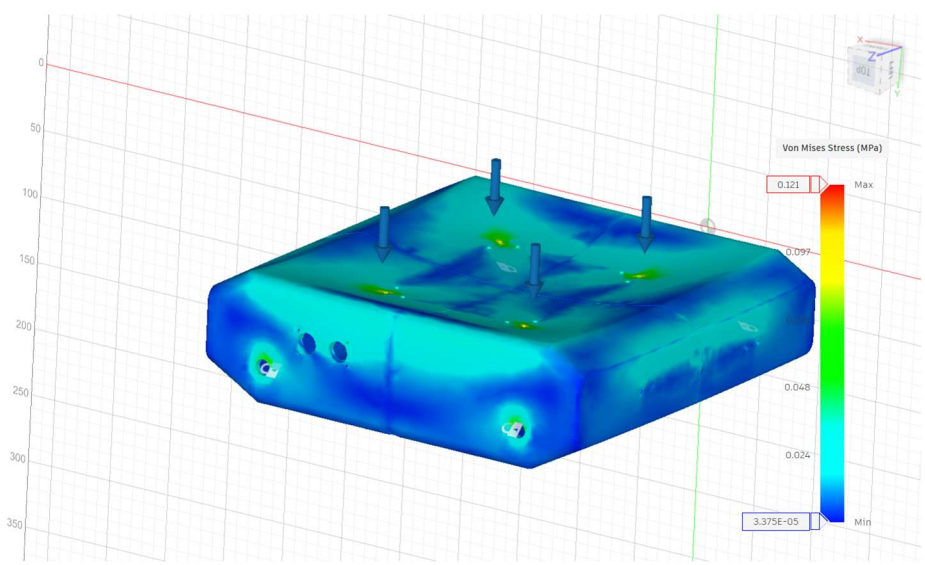

Under the corner load, stress concentrates in the vicinity of the impacted corner and the adjacent motor mount region. The maximum von Mises stress rises to 0.369 MPa, but this is still far below the 20 MPa yield strength, resulting in a safety factor of approximately 54. Even in this worst-case static scenario, the chassis remains in the purely elastic regime.

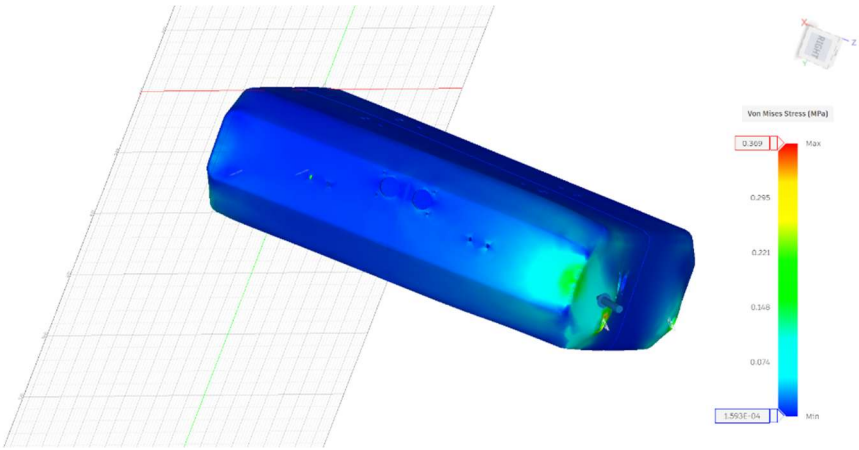

5.3 Displacement Behaviour

For both load cases, global deflections are extremely small. The uniform top load produces the largest total displacement of about 0.013 mm, mainly as gentle bending of the upper deck between supports. The corner load, despite producing higher peak stress locally, results in a slightly smaller maximum displacement of about 0.009 mm due to the more localised nature of the load and shorter load path to the fixed supports. In both cases, deflections are negligible relative to typical manufacturing tolerances and sensor alignment requirements.

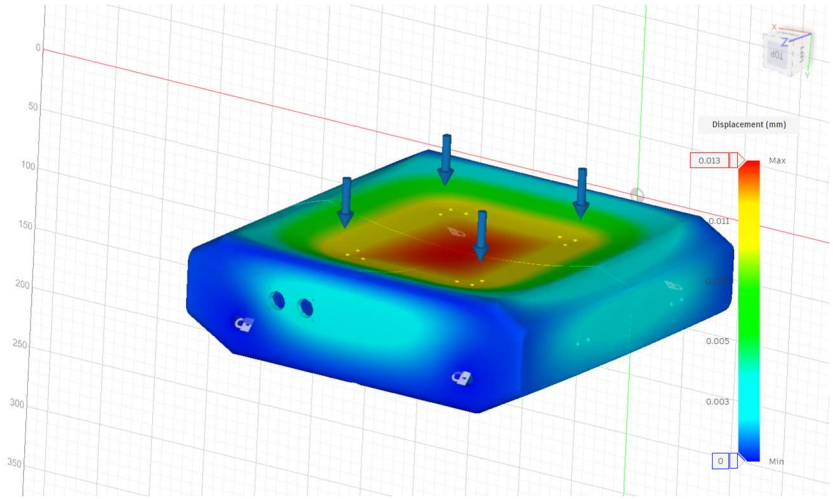

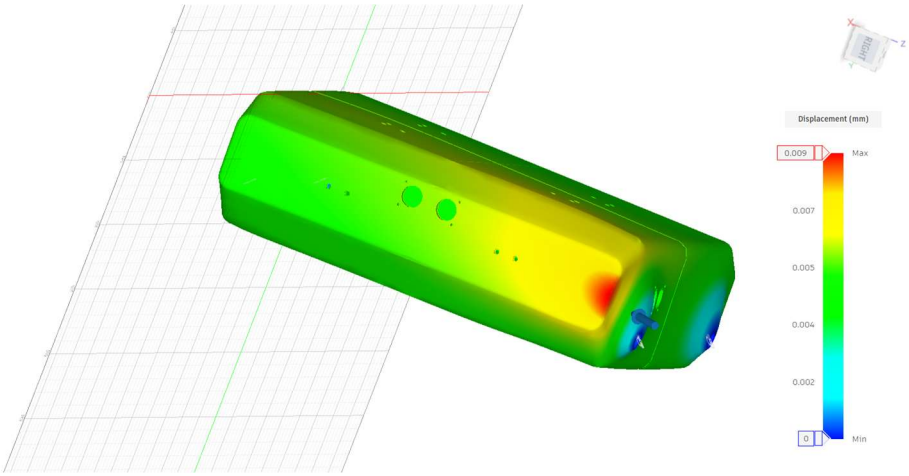

6. Discussion

The analysis indicates that the current ABS chassis design is structurally very conservative for the assumed loading conditions. Stress magnitudes are less than 2% of the ABS yield strength even under the more severe corner loading, and safety factors remain well above 50. Such high margins suggest that material could be removed from low-stress regions to reduce weight and print time while still maintaining ample strength.

The regions of highest stress occur near geometric discontinuities around the motor mounts and at the impacted front corner. These areas are natural candidates for future refinement, such as adding local ribs, increasing fillet radii, or thickening the shell slightly if heavier payloads are envisaged. Conversely, large flat panels that see minimal stress could be light weighted through pockets or cut-outs guided by the FEA contours.

It is important to note that the present study is limited to linear static loading. Real rescue-robot missions may involve repeated impacts, vibration, and environmental degradation, which would require dynamic and fatigue analysis, as well as more detailed material characterization of the actual printed parts. Nevertheless, this first-pass study confirms that the basic geometry is mechanically sound for initial prototyping.

7. Conclusions

Based on the static FEA of the ABS rescue-robot chassis, the following conclusions are drawn:
1. The chassis easily withstands the assumed 10 N uniform payload on the upper deck, with a maximum von Mises stress of 0.121 MPa and a minimum safety factor above 165 relative to ABS yield strength.
2. A more severe 30 N corner load produces higher local stress (0.369 MPa) but still maintains a very high safety factor of about 54, indicating strong robustness against localised impacts.
3. Displacements under both load cases are below 0.02 mm, implying that structural stiffness is more than adequate for maintaining sensor alignment and ground clearance.
4. The design is substantially over-safe for the current load assumptions, providing an opportunity for future optimisation through material removal in low-stress regions and targeted strengthening only where needed.

---

8. Future Work

Planned extensions of this work include:
- Performing a topology-optimisation or FEA-guided light-weighting study to reduce mass while keeping safety factors above a chosen target.
- Exploring alternative materials such as PETG or nylon for improved impact and fatigue performance.
- Extending the analysis to include dynamic load cases representative of drops, repeated bumps, and vibration.
- Integrating experimental testing (drop tests and payload loading) on a printed prototype to validate the simulation results.

This report, along with the associated CAD files and FEA result summaries, will be archived in a public GitHub repository so that future students can reuse and build upon the chassis as a low-cost platform for SLAM and search-and-rescue robotics research.